GENERAL

1. CONTRACTOR SHALL VERIFY ALL DIMENSIONS, ELEVATIONS, AND CONDITIONS OF THE SITE AND EXISTING CONDITIONS PRIOR TO COMMENCING CONSTRUCTION. IF THERE ARE ANY DISCREPANCIES BETWEEN THE EXISTING CONDITIONS AND THESE DRAWINGS AND SPECIFICATIONS, THE CONTRACTOR SHALL NOTIFY THE OWNER IMMEDIATELY IN WRITING. IN NO CASE SHALL DIMENSIONS BE SCALED FROM PLANS, SECTIONS OR DETAILS ON THESE DRAWINGS.
2. ALL CONSTRUCTION SHALL BE IN ACCORDANCE WITH THE 2010 CALIFORNIA BUILDING CODE (C.B.C.), INCLUDING THE TOWN OF FAIRFAX BUILDING CODE AMENDMENTS.
3. ALL OMISSIONS AND CONFLICTS BETWEEN THE VARIOUS ELEMENTS OF THE WORKING DRAWINGS AND/OR SPECIFICATIONS SHALL BE BROUGHT TO THE ATTENTION OF THE ENGINEER BEFORE PROCEEDING WITH ANY WORK SO INVOLVED.
4. THE CONTRACTOR SHALL LOCATE AND PROTECT ALL EXISTING UTILITY LINES AND CONNECTIONS INCLUDING SEWER, WATER, GAS, AND ELECTRIC SERVICES BEFORE AND DURING HIS WORK.
5. WHERE A CONSTRUCTION DETAIL IS NOT SHOWN OR NOTED, THE DETAIL SHALL BE THE SAME AS FOR OTHER SIMILAR WORK
6. NO PIPES, DUCTS, SLEEVES, CHASES, ETC., SHALL BE PLACED IN SLABS, BEAMS, OR WALLS UNLESS SPECIFICALLY SHOWN OR NOTED, NOR SHALL ANY STRUCTURAL MEMBER BE CUT FOR PIPES, DUCTS, ETC., UNLESS OTHERWISE NOTED. CONTRACTOR SHALL OBTAIN PRIOR APPROVAL FOR INSTALLATION OF ANY ADDITIONAL PIPES, DUCTS, ETC
7. THE CONTRACTOR SHALL ASSUME SOLE AND COMPLETE RESPONSIBILITY FOR THE JOB SITE CONDITIONS, INCLUDING SAFETY OF ALL PERSONS AND PROPERTY, DURING THE COURSE OF CONSTRUCTION OF THIS PROJECT. THIS REQUIREMENT SHALL APPLY CONTINUOUSLY, AND SHALL NOT BE LIMITED TO NORMAL WORKING HOURS. THE CONTRACTOR FURTHER AGREES TO HOLD THE DESIGN PROFESSIONAL HARMLESS FROM ANY AND ALL LIABILITY, REAL OR ALLEGED, IN CONNECTION WITH THE PERFORMANCE OF WORK ON THIS PROJECT, EXCEPTING LIABILITY ARISING FROM THE SOLE NEGLIGENCE OF THE DESIGN PROFESSIONAL.
8. CONTRACTOR SHALL TAKE PRECAUTIONARY MEASURES TO ENSURE THAT ALL PROPERTY IS PROTECTED DURING THIS OPERATION. ANY DAMAGE OR CHANGED CONDITIONS SHALL BE REPAIRED AND RESTORED TO A CONDITION EQUAL TO THAT EXISTING AT THE COMMENCEMENT OF THE WORK. CONTRACTOR SHALL RESTORE ANY DAMAGE AT HIS OWN EXPENSE.

DESIGN LOADS

ACTIVE SOIL PRESSURE..45 PCF
TRAFFIC SURCHARGE..200 PSF

REINFORCING STEEL

MATERIALS:

1. BAR REINFORCEMENT SHALL BE: ASTM A 615, GRADE 60, UNLESS OTHERWISE NOTED.

EXECUTION:

1. REINFORCING DETAILING, BENDING, AND PLACING SHALL BE IN ACCORDANCE WITH THE CONCRETE REINFORCING STEEL INSTITUTE'S "MANUAL OF STANDARD PRACTICE", LATEST EDITION.
2. REINFORCING STEEL SHALL BE PROVIDED WITH THE FOLLOWING AMOUNTS OF COVER FOR CAST-IN-PLACE CONCRETE:
   - 2.a. CONCRETE DEPOSITED AGAINST EARTH — 3"
   - 2.b. CONCRETE SURFACE (FORMED) EXPOSED TO EARTH OR WEATHER:
     - #6 THROUGH #18 BARS — 2
     - #5 BAR AND SMALLER — 1 1/2"
   - 2.c. CONCRETE NOT EXPOSED TO EARTH OR WEATHER:
     - SLABS, WALLS, JOISTS:
       - #11 BAR AND SMALLER — 3/4"
     - BEAMS, COLUMNS:
       - PRIMARY REINFORCEMENT — 1 1/2"
       - TIES, STIRRUPS, SPIRALS — 1 1/2"
3. ALL REINFORCING STEEL, ANCHOR BOLTS, DOWELS, AND INSERTS SHALL BE WELL SECURED IN POSITION PRIOR TO PLACING CONCRETE OR GROUT.
4. LAP SPLICES OF REINFORCING BARS IN CONCRETE SHALL BE CLASS B TENSION SPLICES AS DEFINED IN ACI 318-05 UNLESS OTHERWISE NOTED.
5. CONTACT STRUCTURAL ENGINEER TO OBSERVE AND ACCEPT PLACEMENT OF ALL REINFORCING ANCHOR BOLTS, CONDUITS, AND OTHER EMBEDMENTS PRIOR TO CONCRETE POURING.

TABLE OF DEVELOPMENT LENGTHS AND SPLICES

f'c = 3000 fy = 60000

BAR SIZE	db	DEVELOPMENT LENGTHS ld	ldc	ldh	LAP SPLICES ls
3	3/8"	17	9	6	22
4	1/2"	22	11	8	29
5	5/8"	28	14	10	36
6	3/4"	33	17	12	43
7	7/8"	48	20	14	63
8	1"	55	22	16	72
9	1 1/8"	62	25	18	81
10	1 1/4"	69	28	20	90
11	1 3/8"	76	31	22	98

NOTES:

ld = DEVELOPMENT LENGTH OF DEFORMED BARS IN TENSION.
ldc = DEVELOPMENT LENGTH OF DEFORMED BARS IN COMPRESSION.
ldh = DEVELOPMENT LENGTH OF STANDARD HOOK IN TENSION.
ls = LAP SPLICE LENGTH.

1. "ld" AND "ls" BASED ON MIN. CONCRETE COVER < db AND BAR CLEAR SPACING < 2xdb. FOR ALL OTHER CASES, INCREASE "ld" AND "ls" BY 50%.
2. FOR EPOXY-COATED BARS, "ld" AND "ldh" SHALL BE INCREASED BY 20%.
3. FOR HORIZONTAL BAR PLACED OVER MORE THAN 12" OF FRESH CONCRETE, "ld", AND "ls" SHALL BE INCREASED BY 30%.
4. "ldh" BASED ON CONCRETE SIDE COVER (NORMAL TO PLANE OF HOOK) > 2 1/2" AND COVER OF BAR EXTENSION BEYOND HOOK > 2". FOR ALL OTHER CASES INCREASE "ldh" BY 45%.
5. LAP SPLICES CLASSIFICATION IS CLASS B.

REINFORCED CONCRETE

MATERIALS:

1. CEMENT SHALL CONFORM TO ASTM C 150, TYPE I OR TYPE II.
2. AGGREGATES FOR NORMAL WEIGHT CONCRETE SHALL CONFORM TO ASTM C 33. MAXIMUM SIZE OF AGGREGATE SHALL BE 1".
3. READY-MIX CONCRETE SHALL BE MIXED AND DELIVERED IN ACCORDANCE WITH ASTM C 94. SUBMIT AND OBTAIN APPROVAL OF ALL MIX DESIGNS PRIOR TO PLACING CONCRETE.
4. CONCRETE SHALL HAVE THE FOLLOWING MINIMUM COMPRESSIVE STRENGTHS (f'c) AT 28 DAYS. CONCRETE SHALL BE NORMAL WEIGHT.

   STRUCTURAL BEAMS:......................... 4000 PSI
5. ADMIXTURES SHALL COMPLY WITH ASTM C 494 AND BE OF A TYPE THAT INCREASES THE WORKABILITY OF THE CONCRETE BUT SHALL NOT BE CONSIDERED TO REDUCE THE SPECIFIED MINIMUM CEMENT CONTENT. CALCIUM CHLORIDE OR ANY OTHER CORROSIVE ADMIXTURE SHALL NOT BE USED.
6. THE MINIMUM SACKS OF CEMENT PER CUBIC YARD OF CONCRETE SHALL BE AS FOLLOWS:

f'c	NUMBER OF SACKS	WATER/CEMENT	SLUMP
2500 PSI	(5) SACKS	0.55	4"
3000 PSI	(5 1/2) SACKS	0.50	4"
4000 PSI	(6 1/4) SACKS	0.45	4"
5000 PSI	(7) SACKS	0.45	4"

15% OF CEMENT WEIGHT MAY BE POZZOLAN-FLY ASH.

EXECUTION:

1. CONCRETE WORK SHALL CONFORM TO ALL REQUIREMENTS OF ACI 301, "SPECIFICATIONS FOR STRUCTURAL CONCRETE FOR BUILDINGS," EXCEPT AS MODIFIED BY THESE NOTES.
2. U.N.O., ALL CONCRETE MEMBERS SHALL BE POURED MONOLITHICALLY.
3. NO CONDUIT PLACED IN A CONCRETE SLAB SHALL HAVE AN OUTSIDE DIAMETER GREATER THAN 1/3 THE THICKNESS OF THE SLAB. NO CONDUIT SHALL BE EMBEDDED IN A SLAB THAT IS LESS THAN 3 1/2" THICK. EXCEPT FOR LOCAL OFFSETS, MIN. CLEAR DISTANCE BETWEEN CONDUITS SHALL BE 6".
4. NO CONDUIT SHALL BE PLACED IN THE CONCRETE TOPPING OVER THE STEEL DECKING WITHOUT PRIOR APPROVAL OF THE ENGINEER.
5. PROJECTING CORNERS OF SLABS, BEAMS, WALLS, COLUMNS, ETC., SHALL BE FORMED WITH A 3/4" CHAMFER UNLESS OTHERWISE NOTED.
6. DESIGN AND CONSTRUCTION OF FORMWORK SHALL BE THE RESPONSIBILITY OF THE CONTRACTOR AND SHALL BE PERFORMED IN ACCORDANCE WITH ACI 347-04.
7. FORMS MAY BE REMOVED WHEN FIELD-CURED CYLINDERS ACHIEVE 75% OF THE SPECIFIED 28-DAY STRENGTH, BUT NOT SOONER THAN THE TIMES INDICATED IN ACI 347-04. IT SHALL BE THE RESPONSIBILITY OF THE CONTRACTOR TO MAKE AND PAY FOR THE COSTS OF ANY SUPPLEMENTAL STRENGTH TESTS.
8. UNLESS OTHERWISE NOTED, CONCRETE FLOORS SHALL BE SCREEDED TO AN EVEN PLANE, FLOATED, AND STEEL-TROWELED TO A SMOOTH FINISH. PROVIDE JOINTS AS INDICATED.
9. ALL CONCRETE SHALL BE THOROUGHLY COMPACTED BY A MECHANICAL VIBRATOR DURING THE OPERATION OF PLACING AND SHALL BE THOROUGHLY WORKED AROUND REINFORCEMENT AND EMBEDDED FIXTURES AND INTO CORNERS OF FORMS.

CURING BY THE ABOVE METHODS SHALL BE CONTINUED FOR AT LEAST 7 DAYS.

STRUCTURAL OBSERVATION

1. PER CBC SECTION 1709, THE OWNER SHALL EMPLOY CSW|ST2 ENGINEERING GROUP, OR ANOTHER REGISTERED DESIGN PROFESSIONAL TO PERFORM STRUCTURAL OBSERVATION AS DEFINED IN CBC SECTION 1702. THE ENGINEER SHALL PERIODICALLY PERFORM VISUAL OBSERVATIONS OF THE STRUCTURAL SYSTEMS FOR CONFORMANCE WITH THE APPROVED PLANS AT SIGNIFICANT CONSTRUCTION STAGES AND AT COMPLETION OF THE STRUCTURAL SYSTEM. THE MINIMUM COMPONENTS FOR STRUCTURAL OBSERVATIONS ARE THE FOUNDATION, THE STRUCTURAL FRAMING SYSTEMS, AND LATERAL FORCE RESISTANCE ELEMENTS AND CONNECTIONS.
2. OBSERVED DEFICIENCIES SHALL BE REPORTED IN WRITING TO THE OWNER'S REPRESENTATIVE, SPECIAL INSPECTOR, CONTRACTOR AND BUILDING OFFICIAL. THE STRUCTURAL OBSERVER SHALL SUBMIT TO THE BUILDING OFFICIAL A WRITTEN STATEMENT THAT THE SITE VISITS HAVE BEEN MADE AND IDENTIFYING ANY REPORTED DEFICIENCIES THAT, TO THE BEST OF THE STRUCTURAL OBSERVER'S KNOWLEDGE, HAVE NOT BEEN RESOLVED. THESE REPORTS SHALL BE PREPARED AFTER EACH OBSERVATION.
3. STRUCTURAL OBSERVATION SHALL BE IN ADDITION TO THE INSPECTIONS REQUIRED BY CBC SECTIONS 108.

   CONCRETE REINFORCING AND PLACEMENT

SPECIAL INSPECTIONS

1. IN ADDITION TO THE INSPECTIONS REQUIRED BY CBC SECTION 109, APPENDIX CHAPTER 1 ONE OR MORE SPECIAL INSPECTORS, EMPLOYED BY THE OWNER OR THE DESIGN PROFESSIONAL ACTING AS THE OWNER'S AGENT, SHALL PROVIDE INSPECTIONS DURING CONSTRUCTION ON THE TYPES OF WORK LISTED BELOW FOR CONFORMANCE WITH THESE PLANS AND SPECIFICATIONS.
   - 1.1. EXCEPTIONS: SPECIAL INSPECTIONS ARE NOT REQUIRED FOR WORK OF A MINOR NATURE OR AS WARRANTED BY CONDITIONS IN THE JURISDICTION AS APPROVED THE BUILDING OFFICIAL,
2. THE SPECIAL INSPECTOR SHALL BE APPROVED BY THE BUILDING OFFICIAL AND QUALIFIED TO PERFORM INSPECTIONS OF THE PARTICULAR TYPE OF CONSTRUCTION OR OPERATION.
3. A STATEMENT OF SPECIAL INSPECTIONS PREPARED BY THE REGISTERED DESIGN PROFESSIONAL IN RESPONSIBLE CHARGE IN ACCORDANCE WITH SECTION 106.1, APPENDIX CHAPTER 1, SHALL BE SUBMITTED BY THE PERMIT APPLICANT AS A CONDITION FOR PERMIT ISSUANCE.
4. THE SPECIAL INSPECTOR SHALL FURNISH INSPECTION REPORTS TO THE BUILDING OFFICIAL, ENGINEER, ARCHITECT, AND OWNER. ALL WORK IN NON-CONFORMANCE WITH THE PLANS AND SPECIFICATIONS SHALL BE BROUGHT TO THE IMMEDIATE ATTENTION OF THE CONTRACTOR FOR CORRECTION; THEN, IF UNCORRECTED, TO THE OWNER AND BUILDING OFFICIAL.
5. THE SPECIAL INSPECTOR SHALL SUBMIT A FINAL SIGNED REPORT STATING WHETHER THE WORK REQUIRING SPECIAL INSPECTIONS WAS, TO THE BEST OF HIS OR HER KNOWLEDGE, IN CONFORMANCE WITH THE APPROVED PLANS AND SPECIFICATIONS AND THE APPLICABLE WORKMANSHIP PROVISIONS OF THE CBC.
6. THE FOLLOWING WORK REQUIRES SPECIAL INSPECTION:

CONCRETE CONSTRUCTION:

1. PERIODIC INSPECTION OF REINFORCING STEEL.
2. PERIODIC INSPECTION OF CONCRETE PLACEMENT FOR PROPER APPLICATION TECHNIQUES.
3. PERIODIC INSPECTION OF FORMWORK FOR SHAPE, LOCATION AND DIMENSIONS OF THE CONCRETE MEMBER BEING FORMED.

SIMPSON "SET-XP" EPOXY ADHESIVE (ESR-2508):

1. DURING INITIAL ANCHOR INSTALLATION, PERIODIC INSPECTION AND/OR VERIFICATION OF THE FOLLOWING:
   - 1.a. ANCHOR TYPE AND DIMENSIONS.
   - 1.b. CONCRETE TYPE, COMPRESSION STRENGTH, AND THICKNESS.
   - 1.c. HOLE DIMENSIONS AND CLEANING PROCEDURES.
   - 1.d. ANCHOR SPACING, EDGE DISTANCE, EMBEDMENT AND TIGHTENING TORQUE.
2. INSPECTIONS AND VERIFICATIONS REQUIRED FOR INITIAL INSTALLATION OF EACH TYPE AND SIZE OF ADHESIVE ANCHORS.
3. SUBSEQUENT INSTALLATIONS OF THE SAME ANCHOR TYPE AND SIZE, AND INSTALLED BY THE SAME CONSTRUCTION PERSONNEL IS PERMITTED TO BE PERFORMED IN ABSENCE OF THE SPECIAL INSPECTOR.
4. CHANGES TO ANCHOR PRODUCT BEING INSTALLED OR THE CONSTRUCTION PERSONNEL PERFORMING THE INSTALLATION SHALL REQUIRE AN INITIAL INSPECTION.
5. FOR ON GOING INSTALLATIONS OVER AN EXTENDED PERIOD OF TIME, SPECIAL INSPECTOR SHALL MAKE REGULAR INSPECTIONS.

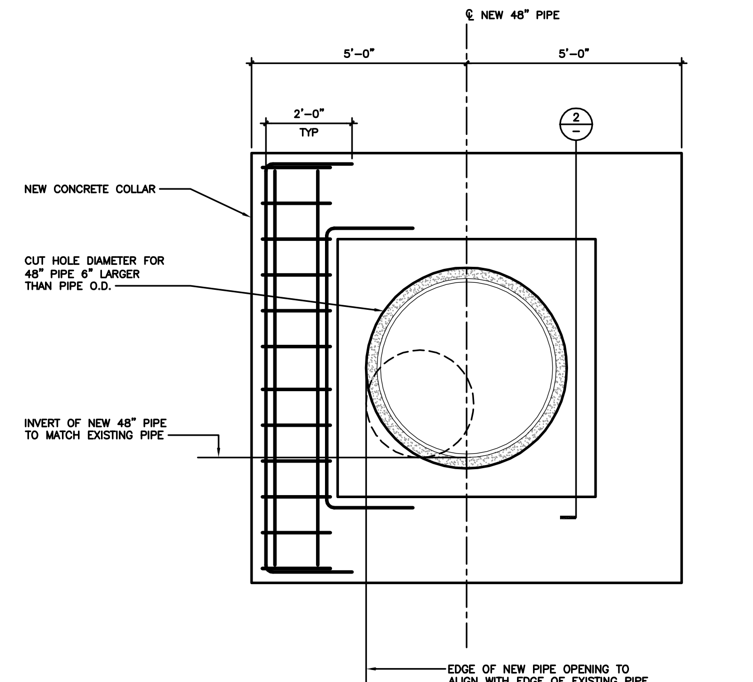

NOTE:
1. CONTRACTOR TO TAKE EXTREME CARE DURING DEMOLITION TO CREATE NEW OPENING IN WALL.
2. REINFORCING SHOWN TYPICAL FOR EACH SIDE OF COLLAR.

1 ELEVATION
SCALE: 1/2" = 1'-0"

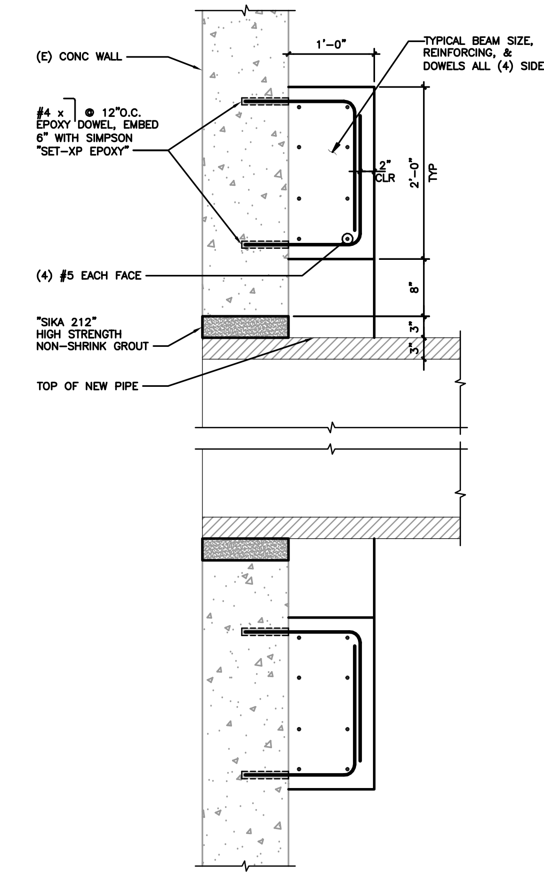

2 SECTION
SCALE: 1" = 1'-0"

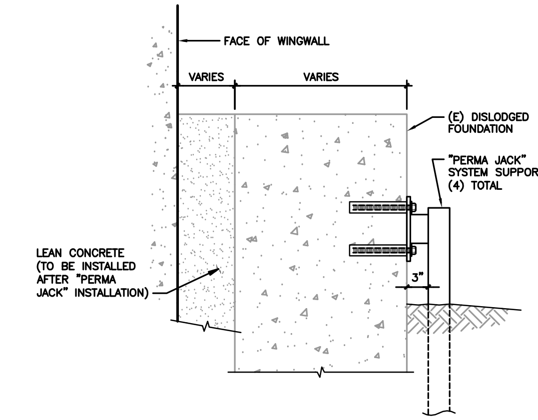

3 SECTION
SCALE: 1" = 1'-0"

Rev	Date	Description	Designed	Drawn	Checked
-	06/14/12	BID SET	GEG	MJD	GKM

CSW | ST2
CSW/Stuber-Stroeh Engineering Group, Inc.
Civil & Structural Engineers | Surveying & Mapping | Environmental Planning
Land Planning | Construction Management
45 Leveroni Court
Novato, CA 94949
tel: 415.883.9850
fax: 415.883.9835
http://www.cswst2.com
© 2010

City	Fairfax
County	Marin
State	California

PASTORI STORM DRAIN OUTFALL

WING WALL DETAILS

TOWN OF FAIRFAX

Prepared Under the Direction of:

Sheet
S1

Scale:	N/A
Date:	04/14/10
Project Number:	4.1086.14
Plan File:	D-4950-06

N:\CIVIL\4\4108614\Dwg\S1.dwg 06/14/2012 - 12:53 PM demjm 1:2.2326