TOWN OF FAIRFAX
STAFF REPORT
Department of Planning and Building Services

TO:	Fairfax Planning Commission
DATE:	October 16, 2014
FROM:	Jim Moore, Director of Planning and Building Services Linda Neal, Principal Planner
LOCATION:	49 and 67 Canyon Road and Vacant parcel between; Assessor's Parcel Numbers 003-032-22, 26 and 27
ZONING:	Residential Single-family RS 6 Zone District
PROJECT:	Reconfiguration of three residentially zoned parcels so all 3 have street frontage and none is landlocked
ACTION:	Lot Line Adjustment; Application # 14-40
APPLICANT:	Moises Elterman, Kimberly Best and Eric Best
OWNER:	Same
CEQA STATUS:	14 C.C.R. § 15061(b)(3)

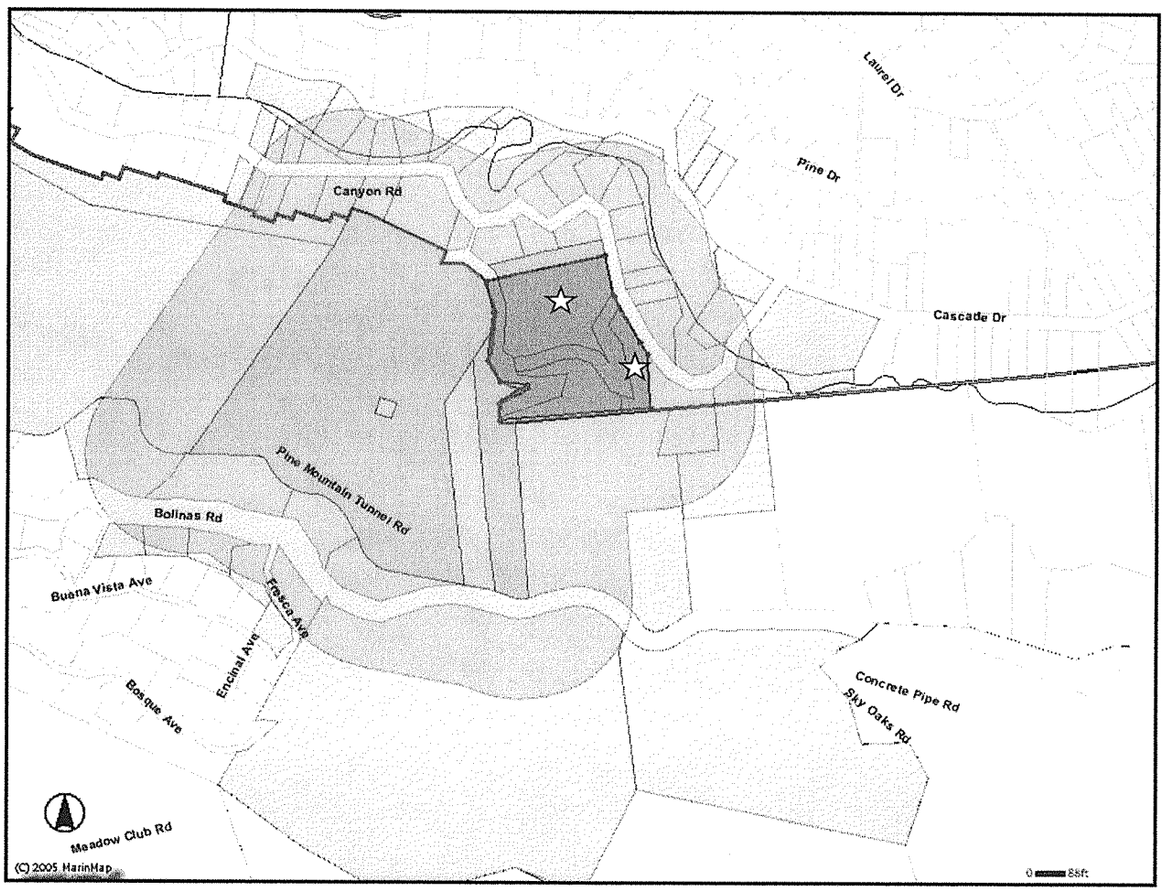

49 and 67 CANYON ROAD

2014STAFFREP/49 canyon.pcstaffrep.10_16_14/ln

AGENDA ITEM # 3

BACKGROUND

Currently existing on the properties involved in this application are a single-family residence, garage, carport and cabin without an indoor kitchen at 49Canyon Road (APN # 003-032-27) and two (2) single-family residences and a structure being used as a sound studio at 67 Canyon Road (APN 003-032-22). The residential structures on both properties were estimated to have been constructed in 1926 by the Marin County Tax Assessor. There also is a third vacant parcel between the two developed sites (APN # 003-032-26). The three existing parcels are shown in attached Exhibit 1. Two paper streets, Sylvan Way and Forrest Drive, used to wind between and behind the properties.

The property owners obtained a quiet title judgment on August 30, 2013 to obtain ownership of the paper streets as shown on Exhibit C of the attached judgment labeled Exhibit 2.

DISCUSSION

The property owners have now submitted a lot line adjustment application to the Town realigning the property lines of the parcels involved and the vacated portions of the street to result in three parcels with equitable portions of the vacated easement property and as " in compliance" with the Town Subdivision Ordinance and Zoning Ordinance as is possible (Exhibit 3 – proposed Lot Line Adjustment Map). Depictions of the individually proposed parcels can be found in Exhibit 4 along with their average slope calculations.

Note: Staff has labeled the proposed parcels numbers 1, 2 and 3 for reference in this staff report and its attachments.

Town Code § 16.40.030 gives the Planning Director the authority to approve lot line adjustments. The same section allows the Director to bring a lot line application to the Planning Commission for review. Staff is bringing this application to the Commission because two of the parcels resulting from the lot line adjustment will not conform to the minimum lot requirements based on their average slopes as set forth in the Residential RS 6 Zone District regulations [Town Code §17. 17.080.050(C)]. The lot line adjustment will also result in an existing carport at 49 Canyon Road straddling the side property line between parcels 2 and 3 and located in both properties side setbacks.

Town Code §16.40.020 lists the requirements a Lot Line Adjustment application must meet in order to be processed as follows:

(A) Number of Lots. The application approval will not result in more lots than currently exist. Currently the owners have three (3) lots between them and the proposed lot line adjustment map has three (3) lots.

(B) Minimum Area

(1) The application approval will not result in a parcel that has less area than the minimum lot area required for new parcels by the regulating zone.

(2) If a lot is already below the minimum lot area required for its zone, then the lot area shall not be further reduced. Lot 3 will be less that the required minimum but it will actually be larger than the existing APN 003-032-27.

(C) Encroachment. The application approval will not result in an encroachment into any public easement, right-of-way or required yard without a variance.

(D) Building and Zoning Regulations. The application approval will result in conformance with the zoning and building ordinances of the Town or will not increase the non-conformance if such already exists.

(E) Agreement. Written agreement of all owners of lots whose size or configuration will be affected by the proposed lot line adjustment.

(F) Other Requirements. All other requirements of this chapter (Subdivisions) are complied with.

Following are the minimum required lot sizes and widths for each of the parcel based on each parcel's average slope as calculated by the project surveyor and reviewed and approved by the Town Engineer:

Parcel No. 1 has a 26% slope and needs to be 18,000 square feet in size and 98 feet wide to conform to the Code. The proposed parcel is 102,372 square feet in size and 109 feet wide so it exceeds the size and width required by the Town Code.

Parcel No. 2 has a 39% slope and needs to be 31,000 square feet in size and 137 feet wide to conform to the Code. The proposed parcel is 48,810 square feet in size and irregular in width with some portions exceeding the minimum required 137 foot width and some portions less than the required 137 foot width.

Parcel No. 3 has a 30% slope and needs to be 22,000 square feet in size and 110 feet wide to conform to the Code. The proposed parcel is only 20,684 square feet in size and 93.4 feet wide.

Lot Line Adjustment Requirements

The proposed lot line adjustment map complies with the lot line adjustment requirements as follows:

- The application does not result in an increase in the number of parcels beyond the three that exist now.

- The proposed lot line adjustment map complies with the regulations set forth in the Subdivision Ordinance Lot Line Adjustment Chapter because it does not make the one substandard parcel, APN # 003-033-27, any smaller (more substandard in size) - it actually increases the parcel size and width from 17,140 square feet in size and 47 feet in width, to 20,684 square feet in size and 93.4 feet in width. The adjustment of the western side property line for this parcel increases the substandard side yard setback of two (2) feet currently maintained by the residence to a conforming 25 foot side yard setback.

- The proposal does not result in any encroachment into a public right-of-way.

- The application, with staff's recommended condition of approval that the building bisected by the side property line proposed between parcel 2 and 3, be either removed or be relocated to a conforming location, complies with the Zoning Ordinance and Building Code. The proposed parcel lines create no other non-conforming setbacks or other zoning non-conformities.

- All the involved property owners have signed the application form.

The final requirement for the submittal of a Lot Line Adjustment application requires that the proposal comply with all other requirements of the Subdivision Ordinance.

The proposal complies with the General Subdivision Requirements found in Town Code § 16.24.030, Lot Requirements, including the following:

- The parcels will all have average widths of over 65 feet.

- All the parcels have at least 65 feet of frontage on a public street.

- The side property lines are as near as possible to right angles and are much closer to right angles than the existing parcels which have very irregular and non-linear property lines.

Other Agency/Department Conditions/Comments

Ross Valley Fire Department

1. A fire protection system may be required to be installed throughout any new buildings or in buildings which are extensively remodeled which complies with the requirements of the National Fire Protection Association (NFPA) 13-D and local standards. A separate deferred permit shall be required for any such systems. Plans and specifications for the system shall be submitted by an individual or firm licensed to design and/or design-build sprinkler systems.

2. Vegetative Management Plans designed in accordance with Ross Valley Fire Standard 220 are required for all residential projects whether or not new construction is proposed.

3. Carbon monoxide alarms are required in all residential structures.

4. Address numbers must be 4 inches tall and if not clearly visible from the street, additional numbers are required for all residential buildings. Any new residential structures must have numbers that are internally illuminated or illuminated by an adjacent light controlled by a photocell and switch off only by a breaker so it will remain illuminated all night.

Marin Municipal Water District

All residential properties that have water service must:

1. Comply with the District Code Title 13, Water Conservation, as a condition of water service.

2. Comply with the backflow prevention requirements of the District.

Sanitary District

1. A new sewer connection will be required for any new residential structures. The size of the sewer lateral will depend on the fixture count calculated during the permitting process.

Fairfax Police and Building Departments

The Fairfax Police Department and the Building Department had no comments on the project.

RECOMMENDATION

1. Open the public hearing and take testimony.
2. Close the public hearing and discuss the matter.
3. Move to adopt Resolution No. 14-15, approving the proposed lot line adjustment between Assessor's Parcel Numbers 003-032-22, 003-032-26 and 003-032-27.

ATTACHMENTS

Resolution No. 14-15
Exhibit A – existing parcels and paper roadway easements as shown on County parcel Map
Exhibit B – Quiet Title judgment
Exhibit C – proposed lot line adjustment map showing new parcel configurations
Exhibit D – individual parcel slope calculation sheets

RESOLUTION NO. 14-15

A Resolution of the Fairfax Planning Commission Approving a Lot Line Adjustment Application between Assessor's Parcel Numbers 003-032-22, 003-032-26 and 003-032-27

WHEREAS, the Town of Fairfax has received an application for a lot line adjustment between Assessor's Parcel Numbers 003-032-22 and 003-032-26 and 003-032-27; and

WHEREAS, the Planning Commission held a duly noticed Public Hearing on October 16, 2014 at which time all interested parties were given a full opportunity to be heard and to present evidence, and at which time the Planning Commission determined that the proposed lot line adjustment proposal, with certain conditions, complies with Town Code Chapters, 16.24, General (Subdivision) Requirements and Improvements, Chapter 16.40, Lot Line Adjustment and Chapter 17.080, RS 6 Single-Family Residential Zone; and

WHEREAS, based on the Preliminary Record of Survey for Lot Line Adjustment, dated December 2013 by Meridian Surveying Engineering, Inc. and other documentary evidence in the record, as well as testimony at the public hearing, the Planning Commission has determined that the applicant has met the burden of proof required to support the findings necessary to approve the proposed lot line adjustment.

WHEREAS, the Commission has made the following findings:

The application does not result in an increase in the number of parcels beyond the three that exist now.

The proposed lot line adjustment map complies with the regulations set forth in the Subdivision Ordinance Lot Line Adjustment Chapter because it does not make the one substandard parcel, APN # 003-033-27, any smaller (more substandard in size) - it actually increases the parcel size and width from 17,140 square feet in size and 47 feet in width, to 20,684 square feet in size and 93.4 feet in width. The adjustment of the western side property line for this parcel increases the substandard side yard setback of two (2) feet currently maintained by the residence to a conforming 25 foot side yard setback.

The proposal does not result in any encroachment into a public right-of-way.

The application conditional approval, with the requirement that the building bisected by the side property line proposed between parcel 2 and 3, be either removed or relocated to a conforming location, complies with the Zoning Ordinance and Building Code. The proposed parcel line create no other non-conforming setbacks or other non-conformities.

All the involved property owners have signed the application form.

The proposal complies with the General Subdivision Requirements found in Town Code § 16.24.030, Lot Requirements, including; a) The parcels will all have average widths of over 65 feet, b) All the parcels have at least 65 feet of frontage on a public street; and,

Reso. 14-5

c)The side property lines are as near as possible to right angles and are much closer to right angles than the existing parcels which have very irregular and non-linear property lines.

WHEREAS, the Commission has approved the lot line adjustment application subject to the applicant's compliance with the following conditions:

1. The applicant shall record the Record of Survey for Lot Line Adjustment Lands of Elterman.

2. The structure that straddles the side property line between Assessor's Parcel Numbers 003-032-26 and 003-032-27 must be removed or be relocated to a conforming location.

3. The applicant shall comply with all applicable local, county, state and federal laws and regulations. Local ordinances which must be complied with include, but are not limited to: the Noise Ordinance, Chapter 8.20, Polystyrene Foam, Degradable and Recyclable Food Packaging, Chapter 8.16, Garbage and Rubbish Disposal, Chapter 8.08, Urban Runoff Pollution Prevention, Chapter 8.32 and the Americans with Disabilities Act.

4. The applicant shall comply with all the conditions of the Marin Municipal Water District, Ross Valley Sanitary District and Ross Valley Fire Department when proposing any future development on any of the three properties.

5. Any future development on any of the parcels is subject to compliance with the Town Zoning Ordinance and the California Environmental Quality Act.

6. The applicant and its heirs, successors, and assigns shall, at its sole cost and expense, defend with counsel selected by the Town, indemnify, protect, release, and hold harmless the Town of Fairfax and any agency or instrumentality thereof, including its agents, officers, commissions, and employees (the "Indemnitees") from any and all claims, actions, or proceedings arising out of or in any way relating to the processing and/or approval of the lot line adjustment as described herein, the purpose of which is to attack, set aside, void, or annul the approval of the project, and/or any environmental determination that accompanies it, by the Planning Commission, Town Council, Planning Director, Design Review Board or any other department or agency of the Town. This indemnification shall include, but not be limited to, suits, damages, judgments, costs, expenses, liens, levies, attorney fees or expert witness fees that may be asserted or incurred by any person or entity, including the applicant, third parties and the Indemnitees, arising out of or in connection with the approval of this project, whether or not there is concurrent, passive, or active negligence on the part of the Indemnitees. Nothing herein shall prohibit the Town from participating in the defense of any claim, action, or proceeding. The parties shall use best efforts, acting in good faith, to select mutually agreeable defense counsel. If the parties cannot reach agreement, the Town may select its own legal counsel and the applicant agrees to pay directly, or timely reimburse on a monthly basis, the Town for all such court costs, attorney fees, and time referenced herein, provided, however, that the applicant's duty in this regard shall be subject to the Town's promptly notifying the applicant of any said claim, action, or proceeding.

NOW, THEREFORE BE IT RESOLVED, the Planning Commission of the Town of Fairfax hereby finds and determines as follows:

The approval of the Lot Line Adjustment for the lands of Best and Elterman, Assessor's Parcel Numbers 003-032-22, 003-032-26 and 003-032-27 complies with the Fairfax General Plan, Town Code and Zoning Ordinance and the State of California Subdivision Map Act.

The foregoing resolution was adopted at a regular meeting of the Planning Commission held in said Town, on the 16th day of October, 2014, by the following vote:

AYES:
NOES:

_____
Chair, Brannon Ketcham

Attest:

_____
Jim Moore, Director of Planning and Building Services

THIS MAP WAS PREPARED FOR ASSESSMENT PURPOSES ONLY. NO LIABILITY IS ASSUMED FOR THE ACCURACY OF THE DATA SHOWN. ASSESSOR'S PARCELS MAY NOT COMPLY WITH LOCAL SUBDIVISION OR BUILDING ORDINANCES.

POR. RANCHO CAÑADA DE HERRERA

Tax Rate Area
3-000
3-001

3-03

EXHIBIT #

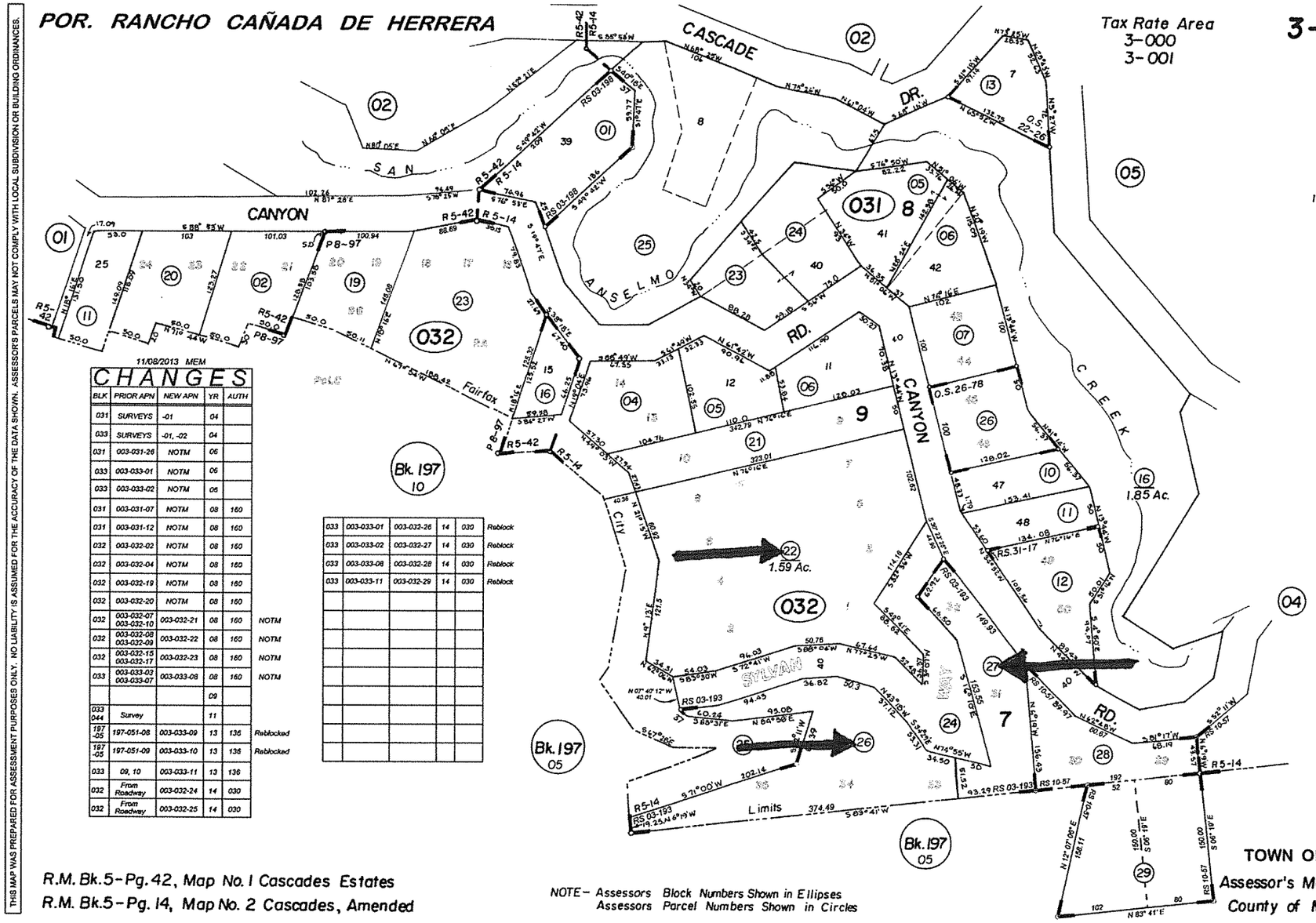

11/08/2013 MEM

CHANGES

BLK	PRIOR APN	NEW APN	YR	AUTH	
031	SURVEYS	-01	04		
033	SURVEYS	-01, -02	04		
031	003-031-26	NOTM	06		
033	003-033-01	NOTM	06		
033	003-033-02	NOTM	06		
031	003-031-07	NOTM	08	160	
031	003-031-12	NOTM	08	160	
032	003-032-02	NOTM	08	160	
032	003-032-04	NOTM	08	160	
032	003-032-19	NOTM	08	160	
032	003-032-20	NOTM	08	160	
032	003-032-07 003-032-10	003-032-21	08	160	NOTM
032	003-032-08 003-032-09	003-032-22	08	160	NOTM
032	003-032-15 003-032-17	003-032-23	08	160	NOTM
033	003-033-03 003-033-07	003-033-08	08	160	NOTM
			09		
033 044	Survey		11		
197 -05	197-051-08	003-033-09	13	136	Reblocked
197 -05	197-051-09	003-033-10	13	136	Reblocked
033	09, 10	003-033-11	13	136	
032	From Roadway	003-032-24	14	030	
032	From Roadway	003-032-25	14	030	

033	003-033-01	003-032-26	14	030	Reblock
033	003-033-02	003-032-27	14	030	Reblock
033	003-033-08	003-032-28	14	030	Reblock
033	003-033-11	003-032-29	14	030	Reblock

R.M. Bk.5-Pg.42, Map No. 1 Cascades Estates
R.M. Bk.5-Pg. 14, Map No. 2 Cascades, Amended

NOTE- Assessors Block Numbers Shown in Ellipses
Assessors Parcel Numbers Shown in Circles

TOWN OF FAIRFAX
Assessor's Map Bk. 3-Pg. 03
County of Marin, Calif.

Leonard A. Rifkind, State Bar No. 133971
Thomas C. Taylor, Jr., State Bar No. 54676
RIFKIND LAW GROUP
100 Drake's Landing Road, Suite 260
Greenbrae, California 94904
Telephone: 415.785-7988
Facsimile: 415.785-7976

Attorneys for Plaintiffs

FILED
AUG 30 2013
KIM TURNER, Court Executive Officer
MARIN COUNTY SUPERIOR COURT
By: J. Chen, Deputy

SUPERIOR COURT OF THE STATE OF CALIFORNIA
IN AND FOR THE COUNTY OF MARIN
UNLIMITED JURISDICTION

MOISES ELTERMAN and KATHLEEN CARROLL, individually and as Trustees of the Moises Elterman and Kathleen Carroll 2009 Family Trust dated June 22, 2009; and PAUL FRADELIZIO, individually, Plaintiffs, vs. TOWN OF FAIRFAX, an incorporated municipality, PAUL FRADELIZIO, individually; FRANK A. FRADELIZIO and MARY ELLEN FRADELIZIO, individually and as Trustees of the Fradelizio Family Trust U.D.T. dated August 8, 1991; MARY DIANE MILLS, individually and as Trustee of the Mary Diane Mills 1994 Trust dated December 22, 1994; MANFRED FRED HONECK, individually and as Trustee of the Manfred Fred Honeck Trust dated March 6, 2002; and ALL PERSONS UNKNOWN, CLAIMING ANY LEGAL OR EQUITABLE RIGHT, TITLE, ESTATE, LIEN, OR INTEREST IN THE PROPERTY ADVERSE TO PLAINTIFFS' TITLE, OR ANY CLOUD ON PLAINTIFFS' TITLE TO THE PROPERTY sued herein as DOES 1 through 100, inclusive, Defendants.	**Case No. CIV 1300923** **JUDGMENT QUIETING TITLE TO PAPER STREETS** **Date: August 30, 2013** **Time: 1:30 p.m.** **Dept: E**

THIS INSTRUMENT IS A CORRECT COPY OF THE ORIGINAL ON FILE IN THIS OFFICE
Attest: AUG 30 2013
KIM TURNER, Court Executive Officer
MARIN COUNTY SUPERIOR COURT
By: J. Chen, Deputy

COUNTY SUPERIOR COURT EUREKA CALIFORNIA

EXHIBIT # 2

This matter came on regularly for an evidentiary hearing for purposes of establishing title to the real property described in Exhibit A (Sylvan Way) and Exhibit B (Forest Drive) attached to the Verified Complaint to Quiet Title to Paper Streets, filed March 1, 2013, pursuant to Code of Civil Procedure section 764.010, on August 30, 2013, in Department E of the above-entitled court, before the Honorable Paul M. Haakenson, judge presiding. Plaintiffs appeared by counsel, Thomas C. Taylor, Jr., of counsel to the Rifkind Law Group. There were no appearances by any defendants or by anyone else claiming any legal or equitable right in the real property.

As required by Code of Civil Procedure section 763.040, by offer of proof, plaintiffs showed that the summons had been served, posted, published as required, and that the notice of pendency of action had been recorded and filed. The court finds that all defendants named herein have been duly served, including service by publication as to all persons unknown, claiming any legal or equitable right, title, estate, lien, or interest in the property adverse to plaintiffs' title, or any cloud on plaintiffs' title to the property. On July 9, 2013, defendant Town of Fairfax filed an Answer (Disclaimer of Interest), disclaiming any right, title or interest in the real property. The court further finds that plaintiffs have duly taken the defaults of all other named defendants. No "persons unknown" appeared in the action and at the hearing plaintiffs dismissed defendants Does 1 through 100, inclusive.

As required by Code of Civil Procedure section 764.010, by offer of proof and live testimony, the court then heard evidence of plaintiffs' title to the property, namely Sylvan Way and Forest Drive, which are paper streets as shown on the map entitled "Amended Map No. 2 of the Cascade Marin Co. Calif." recorded October 11, 1921 in Volume 5 of Maps, Page 14.

The matter was then submitted to the court for decision and after deliberation and good cause appearing, and findings of fact and conclusions of law having been waived,

IT IS ORDERED, ADJUDGED, AND DECREED that **Moises Elterman** and **Kathleen Carroll**, individually and as Trustees of the Moises Elterman and Kathleen Carroll 2009 Family Trust dated June 22, 2009, as to an undivided **Fifty Percent (50%)** interest, and **Paul Fradelizio**, individually, as to an undivided **Fifty Percent (50%)** interest, were on the date of the commencement of this action on March 1, 2013, and now are the owners in fee simple

absolute, and in actual and peaceable possession of the real property located between and contiguous to 49 Canyon Drive and 67 Canyon Drive, Fairfax, California, and more particularly described in **Exhibit A** (Sylvan Drive) and **Exhibit B** (Forest Drive) attached hereto and incorporated herein by this reference. Sylvan Way and Forest Drive are depicted on **Exhibit C** attached hereto and incorporated herein by this reference.

IT IS FURTHER ORDERED, ADJUDGED AND DECREED, that no person other than plaintiffs, including defendants, now has any estate, right, title, interest, or claim in or to the real property, or any part of the real property, either legal or equitable, present or future, vested or contingent.

IT IS FURTHER ORDERED, ADJUDGED AND DECREED, that no person other than plaintiffs, including defendants, now has any mortgage or other lien of any description on the real property or any part of the real property, either legal or equitable, present or future, vested or contingent.

IT IS FURTHER ORDERED, ADJUDGED AND DECREED, that plaintiffs' title to the real property is established and quieted against all the world.

Dated: 8-30-12

Hon. Paul M. Haakenson
Judge of the Marin County Superior Court

130206 SYLVAN WAY

THAT CERTAIN REAL PROPERTY SITUATE IN THE TOWN OF FAIRFAX, COUNTY OF MARIN, STATE OF CALIFORNIA, COMMONLY KNOWN AS SYLVAN WAY AND AS SHOWN ON THE MAP ENTITLED "AMENDED MAP NO. 2 OF THE CASCADES, MARIN CO., CALIF." FILED 10-11-1921 IN VOLUME 5 OF MAPS, AT PAGE 14 AND BEING MORE PARTICULARLY DESCRIBED AS FOLLOWS:

BEGINNING AT THE MOST NORTHERLY CORNER OF LOT 32 AS SHOWN ON SAID MAP, SAID POINT BEING THE INTERSECTION OF THE SOUTHERLY LINE OF SYLVAN WAY WITH THE SOUTHWESTERLY LINE OF CANYON ROAD (FORMERLY FOREST DRIVE); THENCE ALONG THE SOUTHERLY AND EASTERLY RIGHT OF WAY LINES OF SYLVAN WAY THE FOLLOWING BEARINGS AND DISTANCES:

S 32°36'00" W 62.92 FEET;

THENCE S 42°41'00" E 66.50 FEET;

THENCE S 16°10'00 E 153.55 FEET;

THENCE N 74°55'00 W 84.50 FEET;

THENCE N 34°29'00 W 53.31 FEET;

THENCE N 45°04'25" W 36.40 FEET;

THENCE N 77°25'00 "W 50.30 FEET;

THENCE S 88°04'00' W 35.70 FEET;

THENCE S 72°41'00" W 94.09 FEET;

THENCE S 83°30'00" E 57.00 FEET TO THE INTERSECTION OF THE SOUTHERLY LINE OF SYLVAN WAY WITH THE EASTERLY LINE OF FOREST DRIVE AS SHOWN ON SAID MAP;

THENCE LEAVING THE SOUTHERLY LINE, N 07°40'12" W 40.01 FEET TO A POINT ON THE NORTHERLY LINE OF SYLVAN WAY;

THENCE ALONG THE NORTHERLY AND WESTERLY LINES OF SYLVAN WAY THE FOLLOWING BEARINGS AND DISTANCES;

N 83°30'00" E 54.03 FEET;

THENCE N 72°41'00" E 95.71 FEET;

THENCE N88°04'00" E 46.20 FEET;

THENCE S 77°25'00" E 66.99 FEET;

THENCE S 45°04'25" E 52.83 FEET;

THENCE N 03°07'00 W 36.06 FEET;

THENCE N 42°41'00 W 88.52 FEET;

THENCE N 32°36'00" 114.16 FEET TO THE INTERSECTION OF THE NORTHERLY LINE OF SYLVAN WAY WITH THE WESTERLY LINE OF CANYON ROAD;

THENCE S 30°23'25" W 44.90 FEET MORE OR LESS TO THE POINT OF BEGINNING:

130206 FOREST DRIVE

THAT CERTAIN REAL PROPERTY SITUATE IN THE TOWN OF FAIRFAX, COUNTY OF MARIN, STATE OF CALIFORNIA, COMMONLY KNOWN AS FOREST DRIVE AND AS SHOWN ON THE MAP ENTITLED "AMENDED MAP NO. 2 OF THE CASCADES, MARIN CO., CALIF." FILED 10-11-1921 IN VOLUME 5 OF MAPS, AT PAGE 14 AND BEING MORE PARTICULARLY DESCRIBED AS FOLLOWS:

BEGINNING AT A POINT DISTANT THEREON N 06°10'04' W 19.25 FEET FROM THE MOST SOUTHWESTERLY CORNER OF LOT 35 AS SHOWN ON SAID MAP; THENCE N 06°10'04" W 41.00 FEET TO A POINT ON THE NORTHERLY LINE OF FOREST DRIVE; THENCE ALONG THE NORTHELY AND WESTERLY RIGHT OF WAY LINES OF FOREST DRIVE THE FOLLOWING BEARINGS AND DISTANCES:

N 71°00'00" E 109.50 FEET;

THENCE N 86°31'00" W 48.50 FEET;

THENCE N 67°28'00 W 50.00 FEET;

THENCE 31°31'02" W 72.24 FEET;

THENCE N 09°13'00" E 140.33 FEET;

THENCE N 21°15'00" W 75.73 FEET;

THENCE LEAVING THE WESTERLY LINE N 76°16'00" E 40.35 FEET TO A POINT ON THE EASTERLY RIGHT OF WAY LINE OF FOREST DRIVE;

THENCE ALONG THE EASTERLY AND SOUTHERLY LINES OF FOREST DRIVE THE FOLLOWING BEARINGS AND DISTANCES;

S 21°15'00" E 81.35 FEET;

THENCE S 09°13'00" W 121.50 FEET;

THENCE S 62°06'00" E 34.31 FEET;

THENCE S 07°40'12" E 40.01 FEET;

THENCE S 57°18'35" E 15.65 FEET;

THENCE S 86°31'00" E 60.24 FEET;

THENCE N 84°58'00" E 95.08 FEET;

THENCE S 22°11'00" W 62.39 FEET;

THENCE S 71°00'00" W 202.14 FEET MORE OR LESS TO THE POINT OF BEGINNING:

ALL AS SHOWN ON THE ATTACHED MAP ENTITLED "ABANDONMENT OF A PORTION OF SYLVAN WAY AND FOREST TRAIL AND MADE A PART HEREOF.

CONTAINING 26,728 SQUARE FEET MORE OR LESS.

END OF DESCRIPTION

PROFESSIONAL LAND SURVEYOR
STANLEY T. GRAY
PLS 6784
EXP: 9/30/14
STATE OF CALIFORNIA

EXHIBIT "B"

PROPOSED ABANDONMENT OF A PORTION OF SYLVAN WAY AND FOREST TRAIL

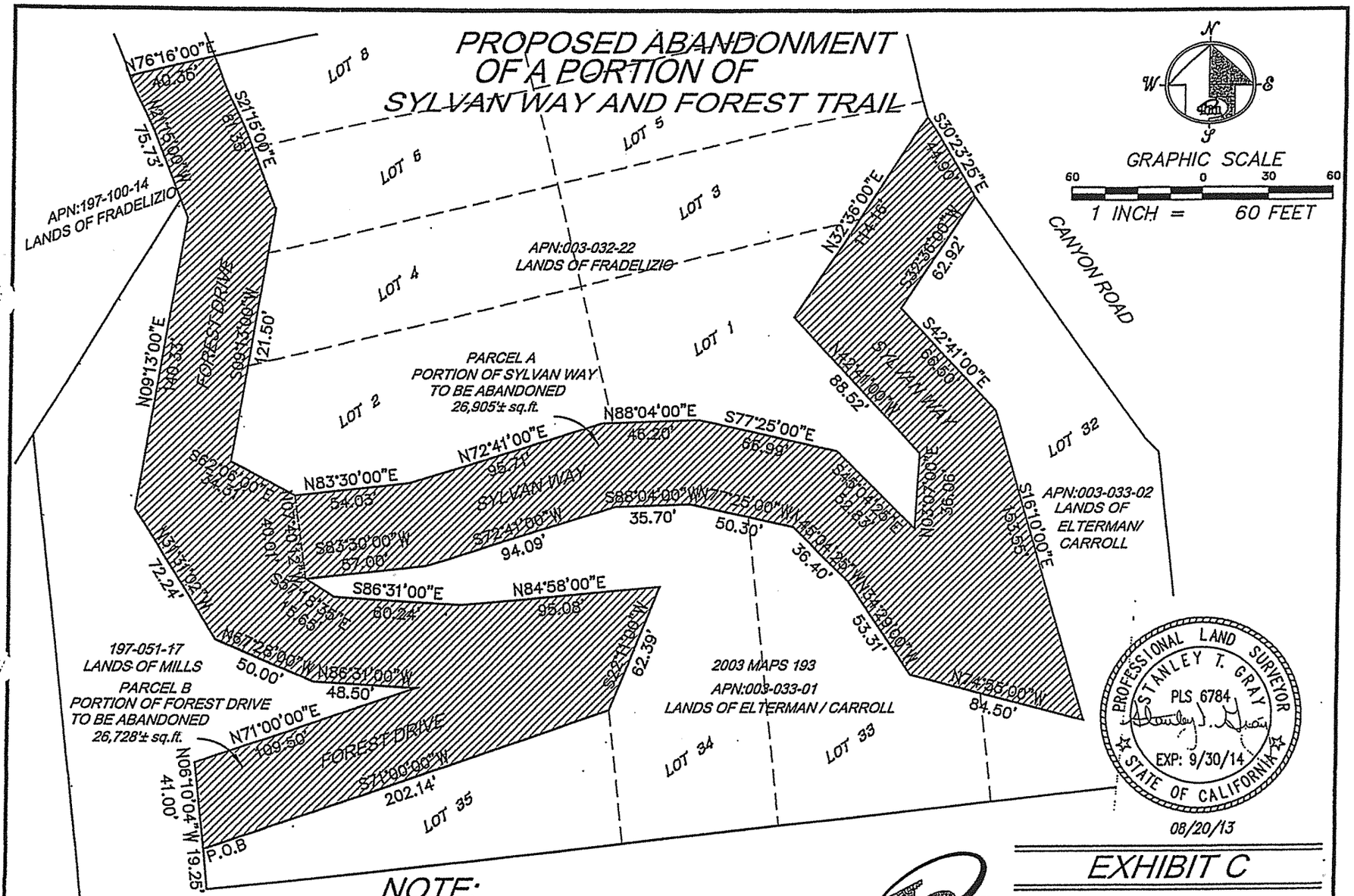

08/20/13

EXHIBIT C

NOTE:

THIS PLAT IS INTENDED TO REPRESENT THE ABANDONMENT OF SYLVAN WAY AND FOREST TRAIL AND IS BASED ON A COMPILATION OF RECORD DATA.

MERIDIAN SURVEYING ENGINEERING, INC.
1812 UNION STREET
SAN FRANCISCO, CA 94123
(415) 440-4131
#12035
info@meridiansurvey.com
777 GRAND AVENUE, SUITE 202
SAN RAFAEL, CA 94901
(415) 456-5450

REFERENCES

THE FOLLOWING DOCUMENTS WERE REVIEWED AS A PART OF THE BOUNDARY ANALYSIS AND FIELD SURVEY OF THE SUBJECT PROPERTY. THEY ARE CITED HEREIN FOR CLARITY AND TO PERPETUATE THE FACT THAT THEY WERE CONSIDERED. MAP REFERENCES, ULTIMATELY UTILIZED IN THE CONCLUSION ARE SHOWN NEXT TO THE RELEVANT DIMENSIONS IN BRACKETS [ ].

[A] 5 RECORD MAPS 14 (CRMC)
[B] 2003 SURVEY MAPS 193 (CRMC)
[C] 30 SURVEY MAPS 50 (CRMC)
[D] 26 SURVEY MAPS 78 (CRMC)
[E] 31 SURVEY MAPS 17 (CRMC)
[F] D.N. 2015-0007024, JUDGEMENT QUIETING TITLE TO PAPER STREETS, SYLVAN WAY AND FOREST DRIVE.
[G] 2010 SURVEY MAPS 57

BASIS OF BEARINGS

BEING N83°41'00"W, BETWEEN A FOUND 3/4" IP RCE TAGGED 10759 AND A FOUND AUTO AXLE AS SHOWN UPON MAP REFERENCE [B] ABOVE. ALL BEARINGS HEREIN MENTIONED ARE RELATED THERETO.

NOTE:

PER [F] HATCHED PORTION OF SYLVAN WAY AND FOREST DRIVE ABANDONED -- ELTERMAN AND FRADELIZIO BOTH RECEIVED UNDIVIDED 50% INTEREST.

COUNTY SURVEYOR'S STATEMENT

THIS MAP HAS BEEN EXAMINED IN ACCORDANCE WITH SECTION 8766 OF THE PROFESSIONAL LAND SURVEYORS' ACT THIS _____ DAY OF _____, 2015.

CRAIG TACKBERY
COUNTY SURVEYOR

BY DEPUTY

SURVEYOR'S STATEMENT

THIS MAP CORRECTLY REPRESENTS A SURVEY MADE BY ME OR UNDER MY DIRECTION IN CONFORMANCE WITH THE REQUIREMENTS OF THE PROFESSIONAL LAND SURVEYORS' ACT AT THE REQUEST OF (CLIENT'S NAME) IN (MONTH) , 2015.

PROFESSIONAL LAND SURVEYOR STANLEY L. GRAY PLS 6764 EXP. 9/30/14 STATE OF CALIFORNIA

STANLEY L. GRAY PLS 6764
LICENSE EXPIRES 9/30/14

N
W E
S
40 0 20 40 80
GRAPHIC SCALE
1 INCH = 40 FEET

AREA:

	EXISTING	PROPOSED
APN: 003-032-22	93,847 SQ.FT.±	102,872 SQ.FT.±
APN: 003-033-01	31,047 SQ.FT.±	48,810 SQ.FT.±
APN: 003-033-02	17,140 SQ.FT.±	20,064 SQ.FT.±

RECORDER'S STATEMENT

FILED THIS _____ DAY OF _____, 20____, AT ____ MINUTES PAST ____ O'CLOCK ____ M., IN BOOK ____ OF MAPS, AT PAGE ____, AT THE REQUEST OF MERIDIAN SURVEYING ENGINEERING, INC. AND MARIN COUNTY DPW.

FEE: _____

COUNTY RECORDER

BY: _____
DEPUTY

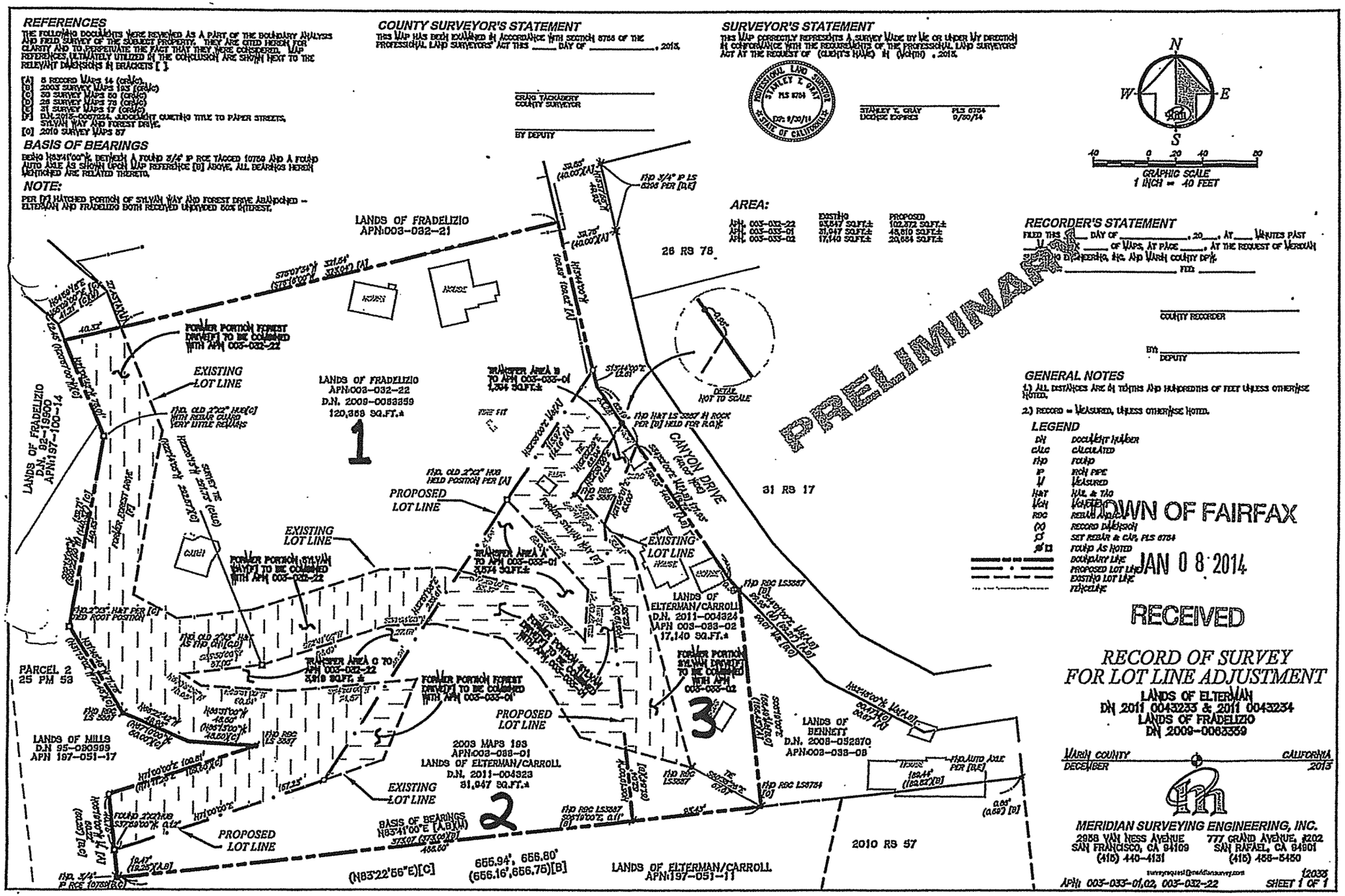

GENERAL NOTES

1.) ALL DISTANCES ARE IN TENTHS AND HUNDREDTHS OF FEET UNLESS OTHERWISE NOTED.

2.) RECORD = MEASURED, UNLESS OTHERWISE NOTED.

LEGEND

DN	DOCUMENT NUMBER
CALC	CALCULATED
FND	FOUND
IP	IRON PIPE
M	MEASURED
MAT	NAIL & TAG
MON	MONUMENT
REC	REBAR ANCHOR
(X)	RECORD DIMENSION
⊙	SET REBAR & CAP, PLS 6764
⊠	FOUND AS NOTED
	BOUNDARY LINE
	PROPOSED LOT LINE
	EXISTING LOT LINE
	CENTERLINE

TOWN OF FAIRFAX
JAN 08 2014
RECEIVED

RECORD OF SURVEY FOR LOT LINE ADJUSTMENT

LANDS OF ELTERMAN
DN 2011 0043233 & 2011 0043234
LANDS OF FRADELIZIO
DN 2009-0063359

MARIN COUNTY, CALIFORNIA
DECEMBER 2013

MERIDIAN SURVEYING ENGINEERING, INC.
2958 VAN NESS AVENUE
SAN FRANCISCO, CA 94109
(415) 440-4131
777 GRAND AVENUE, #202
SAN RAFAEL, CA 94901
(415) 456-5450

12033
APN: 003-033-01,02, 003-032-22
SHEET 1 OF 1

EXHIBIT # 3

ELEVATION DATUM:
TAKEN FROM COUNTY OF MARIN
GIS DATABASE.

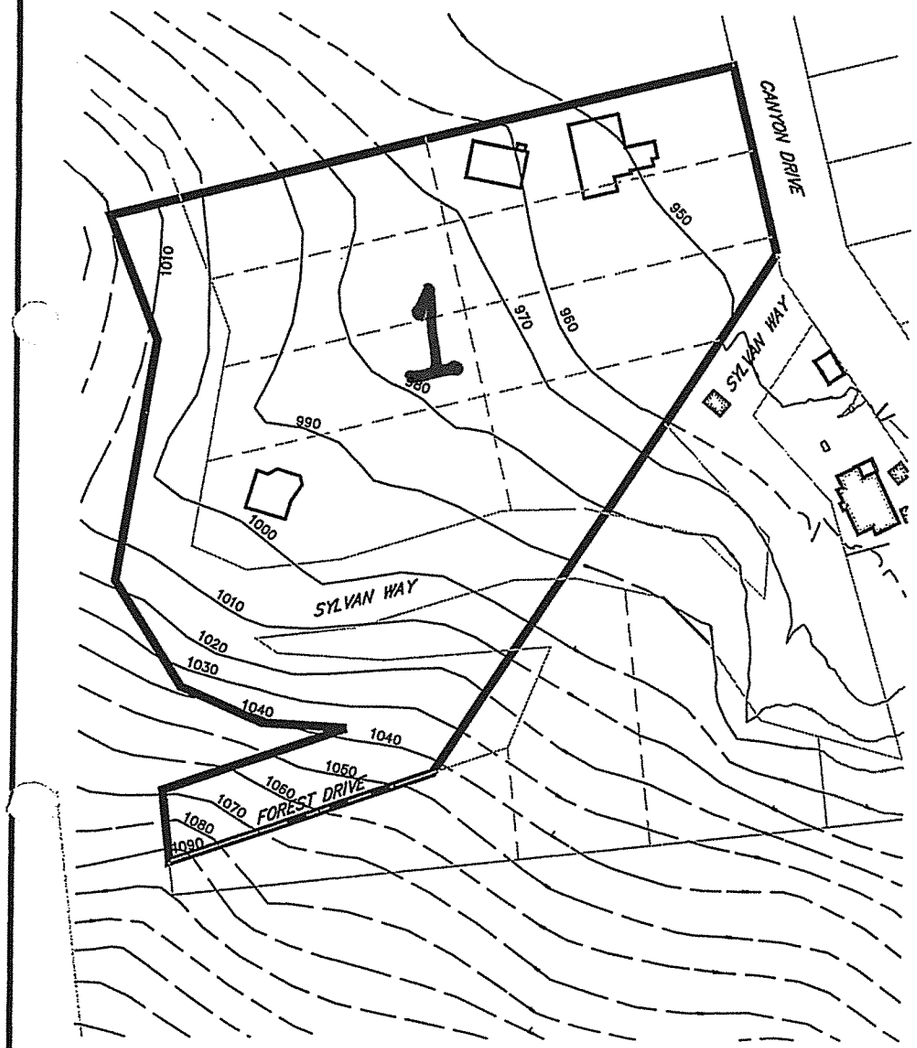

Contour	Length in feet	
950	162	
960	208	
970	234	
980	288	
990	346	
1000	409	
1010	238	67
1020	224	
1030	175	
1040	66	33
1050	74	
1060	57	
1070	60	
1080	35	
1090	12	
	2588	100
Total Length	**2688**	
interval	10	
(L*i)	**26880**	
/area	102372	
avg slope	**0.263**	

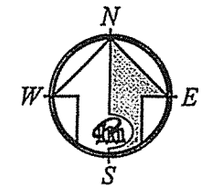

GRAPHIC SCALE
100 0 50 100
1 INCH = 100 FEET

EXHIBIT #

LEGEND

SITE CONTOUR
950 CONTOUR ELEVATION
OFF SITE CONTOUR
PROPERTY BOUNDARY

PROFESSIONAL LAND SURVEYOR
STANLEY T. GRAY
PLS 6784
EXP: 9/30/14
STATE OF CALIFORNIA

TC = Total length of contours
CI = Contour interval
LS = Lot Size

$$\frac{(TC)X(CI)}{LS}$$

PROPOSED LOT
LANDS OF FRADELIZIO
D.N. 2009-0063359
FAIRFAX, CA

AVERAGE SLOPE

MERIDIAN SURVEYING ENGINEERING, INC.
2958 VAN NESS AVENUE
SAN FRANCISCO, CA 94109
(415) 440-4131
(12035)
info@meridiansurvey.com
777 GRAND AVENUE, #202
SAN RAFAEL, CA 94901
(415) 456-5450

ELEVATION DATUM:
TAKEN FROM COUNTY OF MARIN
GIS DATABASE.

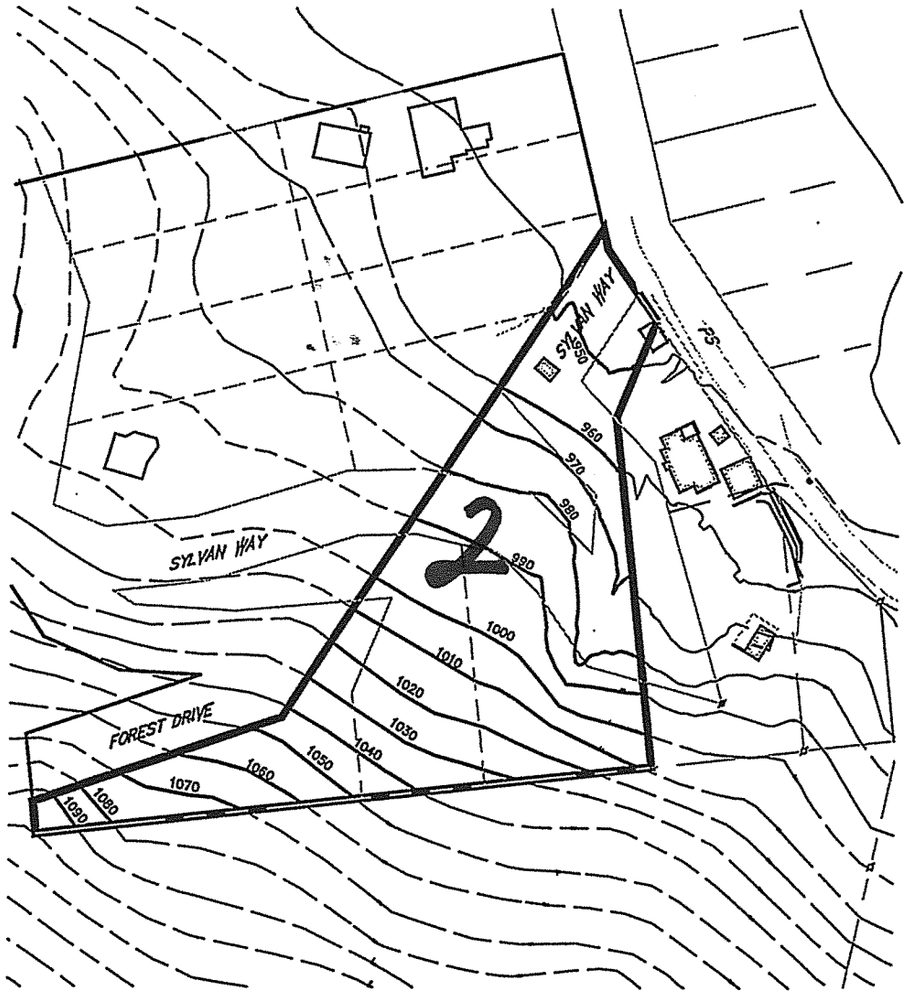

Contour	Length in feet
950	101
960	92
970	167
980	216
990	202
1000	197
1010	201
1020	181
1030	146
1040	95
1050	79
1060	84
1070	80
1080	32
1090	26
	1899
Length	1899
interval	10
L*i	18990
area	48,810
avg slope	0.389

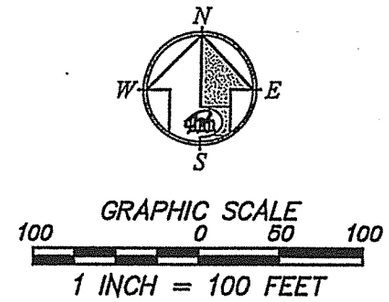

LEGEND

- SITE CONTOUR
- 960 — CONTOUR ELEVATION
- OFF SITE CONTOUR
- PROPERTY BOUNDARY

PROPOSED LOT
LANDS OF ELTERMAN
APN 003-033-01
D.N. 2011-004323
FAIRFAX, CA

TC = Total length of contours
CI = Contour interval
LS = Lot Size

$$\frac{(TC)X(CI)}{LS}$$

AVERAGE SLOPE

MERIDIAN SURVEYING ENGINEERING, INC.
2958 VAN NESS AVENUE
SAN FRANCISCO, CA 94109
(415) 440-4131
(12035)
777 GRAND AVENUE, #202
SAN RAFAEL, CA 94901
(415) 456-5450
info@meridiansurvey.com

ELEVATION DATUM:
TAKEN FROM COUNTY OF MARIN
GIS DATABASE.

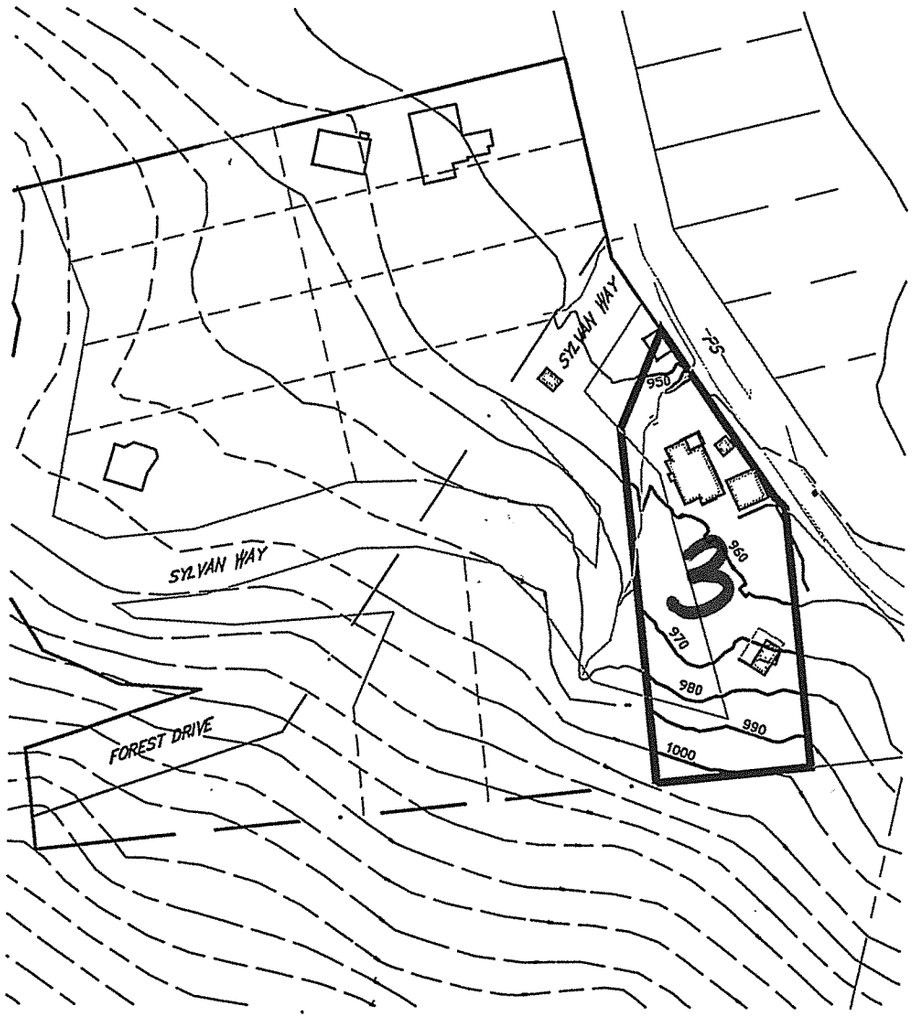

Contour	Length in feet
950	66
960	176
970	128
980	102
990	102
1000	61
	635

Length	**635**
interval	10
L*i	**6350**
area	20,684
avg slope	**0.307**

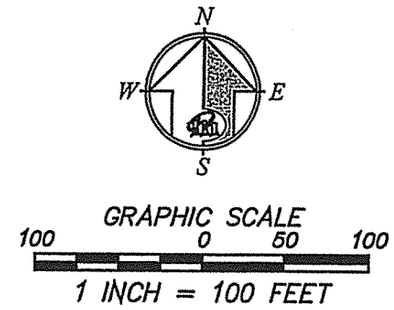

LEGEND

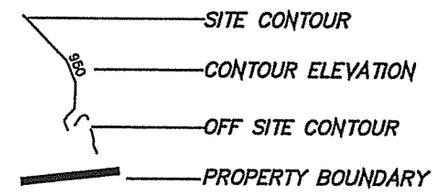

PROFESSIONAL LAND SURVEYOR
STANLEY T. GRAY
PLS 6784
EXP: 9/30/14
STATE OF CALIFORNIA

PROPOSED LOT
LANDS OF ELTERMAN
APN 003-033-02
D.N. 2011-004324
FAIRFAX, CA

TC = Total length of contours
CI = Contour interval
LS = Lot Size

$$\frac{(TC)X(CI)}{LS}$$

AVERAGE SLOPE

MERIDIAN SURVEYING ENGINEERING, INC.
2958 VAN NESS AVENUE
SAN FRANCISCO, CA 94109
(415) 440-4131
(12036)
info@meridiansurvey.com
777 GRAND AVENUE, #202
SAN RAFAEL, CA 94901
(415) 456-5450